INSTALLATION CONDITIONS FOR ILT LINE PRODUCTS

Author	Date	Revision	Description
F.VALOTEAU & A. BLANCHARD	05 Feb 97	Rev.0	Installation conditions for ILT line products
F.VALOTEAU & A. BLANCHARD	17 Feb 97	Rev1.0	Modification: Management of the connector on Multiple Phone Connector accessory EYYT050190
F.VALOTEAU	11 Mar 97	Rev1.1	Management of star connections Management of commands of subassembly ILT8000 Table of actuator or ILT8000 numbers for lengths of 10,20,50,100 meters.

TABLE OF CONTENTS

1. INTRODUCTION **3**

2. ILT LINE PRODUCTS **3**

2.1 ACTUATORS **3**
2.1.1 European line (“Européenne”) 3
2.1.2 Pacific Line (“Pacifique”) 3

2.2 INDIVIDUAL CONTROLS **3**
2.2.1 STANDARD PUSHBUTTONS 3
2.2.2 ILT8000 3
2.2.3 INFRARED 3

2.3 GENERAL CONTROLS **3**

2.4 ACCESSORIES **3**

3. BASIC PRINCIPLES OF THE ILT LIMIT SWITCH UNIT **3**

3.1 MANAGEMENT OF THE POSITION OF THE END PRODUCT **3**

3.2 MANAGEMENT OF THE END LIMITS **3**

4. INTERCONNECTION OF ILT PRODUCTS **3**

4.1 CONDITIONS FOR THE ACTUATORS / STANDARD PUSHBUTTON ASSEMBLY **3**

4.2 CONDITIONS FOR THE ACTUATORS / IR SENSOR ASSEMBLY **3**

4.3 CONDITIONS FOR GENERAL CONTROLS **3**
4.3.1 INSTALLATION WITH GENERAL CONTROL INTERFACE 3
4.3.2 INSTALLATION WITH ILT8000 3

5. ADJUSTMENT OF END LIMITS **3**

6. WIRING PRECAUTIONS **3**

6.1 PASSING CABLES THROUGH THE SHEATHS **3**

INTRODUCTION

ILT line products provide solutions for needs such as brightness control (intermediate position), safety (detection and handling of obstacles), retrofitting (infrared control), assembly into control units (individual controls and general controls), easy installation and adjustment (electronic end limits).

The current system combines ILT50 actuators, controls (individual and general) and accessories. Each configuration meets a specific need.

In order to use this system under the best conditions, the installation must be expertly handled.
The purpose of this document is to show the various ways of connecting the products and adjusting the end limits.

ILT LINE PRODUCTS

ACTUATORS

The actuator is the primary element of the system; it provides movement for the end product (roller shutter or awning).
There are two lines of actuators (European and Pacific), each offering several torque values (one single speed: 17 rpm).

European line ("Européenne")

Name	Torque/Speed	Reference
ILT Ariane	6/17	200811
ILT Ceres	8/17	200812
ILT Jet	10/17	200813
ILT Atlas	15/17	200814
ILT Meteor	20/17	200815
ILT Helios	30/17	200817
ILT Mariner	40/17	200819

Pacific Line ("Pacifique")

Name	Torque/Speed	Reference

ILT 510R3	10/17	200850
ILT 515R3	15/17	200851
ILT 530R3	30/17	200854

INDIVIDUAL CONTROLS

STANDARD PUSHBUTTONS

The standard pushbuttons control the closing or opening of an electrical contact. They are grouped in pairs and activate the Up and Down functions. In most cases, they are pulse-type switches (pressing for a short time suffices) and pressing on both buttons simultaneously sends a STOP command to the actuator.

ILT8000

The ILT8000 is an individual control with the conventional functions for moving the end product (Up, Down and Stop) as well as functions for setting and controlling the intermediate position.

The ILT8000 also offers a very simple way to set the end limits without having to use the adjustment tool.

This individual control box is connected to the actuator by a 4-point telephone cable carrying 5V, which makes installation simple and very safe.

The general control SL9000n can easily be connected to the ILT8000 (screw-type terminal plate with 3 points) and is used to control the up, down and stop functions and the intermediate position of the end products.

Name	Reference
ILT8000	154069

INFRARED

The infrared control offers the same functions as a standard switch (up, down, stop, adjustment and control of the intermediate position) and is very convenient for the end user who prefers remote control.

It is especially useful for retrofitting because the wiring is limited to connecting the sensor to the actuator.

The infrared control is made up of an IR transmitter (remote control) and an IR sensor connected to the actuator by a 4-point telephone cable carrying 5V, which makes the installation simple and very safe.

Name	Reference
IR ILT sensor	EACT028690
IRT 103 transmitter	KE10102

GENERAL CONTROLS

A general control is used to control several actuators or assemblies of actuators simultaneously. It is connected to the ILT8000 individual control boxes or to the general control interface board (see accessories).

Name	Reference
SL9000n	
SL1010n	

ACCESSORIES

Name	Reference
Adjustment tool	ECST050180
Multiple phone connector	EYYT050190
Screw term. plate/Phone conn. interface	EYYT050200
General control interface	EYYT050220
White telephone cable 0.3m	209060
White telephone cable 1.5m	209061
White telephone cable coiled 2.5m	209062
White telephone cable coiled 3m	209063
Right wheel ABS LT50	705414
Left wheel ABS LT50	705415

Adjustment tool ECST050180
This tool is directly connected to the actuator by a telephone cable and is used to set the motor's direction of rotation, to adjust the end limits and to record the intermediate position.

Multiple phone connector EYYT050190
This unit is used to connect in parallel four subassemblies equipped with telephone cables (typical configuration: 1 ILT50 + 1 ILT8000 + 1 IR sensor or ILT50 + 1 IR sensor + 1 EYYT050200 + standard pushbutton).

Screw-type terminal plate/Phone connector interface EYYT050200
This unit is used to connect two subassemblies equipped with telephone cables in parallel with a standard pushbutton.

General control interface EYYT050220
This unit is used to connect several sets of actuators to a single general control.

BASIC PRINCIPLES OF THE ILT LIMIT SWITCH UNIT

MANAGEMENT OF THE POSITION OF THE END PRODUCT

The position of the winding tube is controlled by the electronics of the motor (ILT limit switch unit). A magnetized wheel driven by the tube generates pulses through two sensors. These pulses are taken into account by the micro-controller to determine the position of the end product.

MANAGEMENT OF THE END LIMITS

The end limits of the motor are defined by the number of pulses needed to go from the upper limit to the lower limit. The sensors give a resolution of 1°56 on the winding tube. The precision on the winding tube is +/-2° (180 pulses per complete rotation of the tube).

The pulse counter is at 0 at the upper limit. The current position of the motor is defined as the number of pulses to go from the upper limit to this position.

The adjustment of the end limits consists of establishing position 0 for the upper limit and N for the lower limit (N depends on the size of the end product). These two values are recorded and define the limits beyond which the motor cannot go.

The adjustment is also used to establish the motor's direction of rotation (for a given wiring, the motor can turn in the wrong direction in relation to the control). In order to avoid changing the wiring, the user can reverse the direction of rotation during adjustment (see instructions for the adjustment tool or the ILT8000).

INTERCONNECTION OF ILT PRODUCTS

CONDITIONS FOR THE ACTUATORS / STANDARD PUSHBUTTON ASSEMBLY

N Remote motors at distance of L and cable with total length Lmax = N x L .
(Lmax represents the cumulative length of cable between the pushbutton and the most distant actuator).

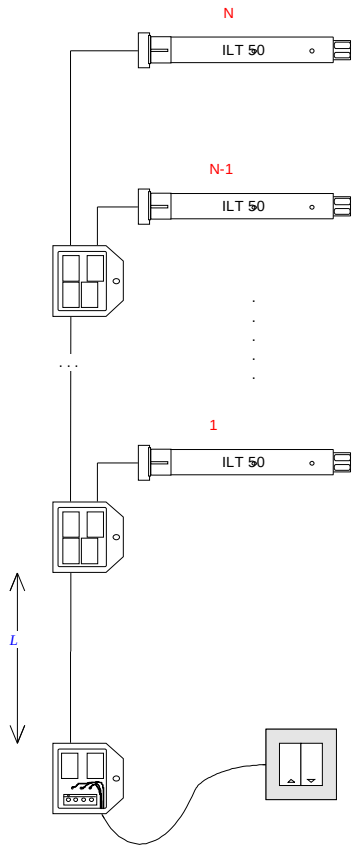

The further away the actuator is from the switch, the greater the voltage drop in the cable because the currents are added together as the nodes are reached (going from the actuators to the standard pushbutton).

Table L= f(N)

(Lmax represents the cumulative length of cable between the pushbutton and the most distant actuator).

N	1	8	10	20	30
L (Lmax/N)	4000	100	50	20	10

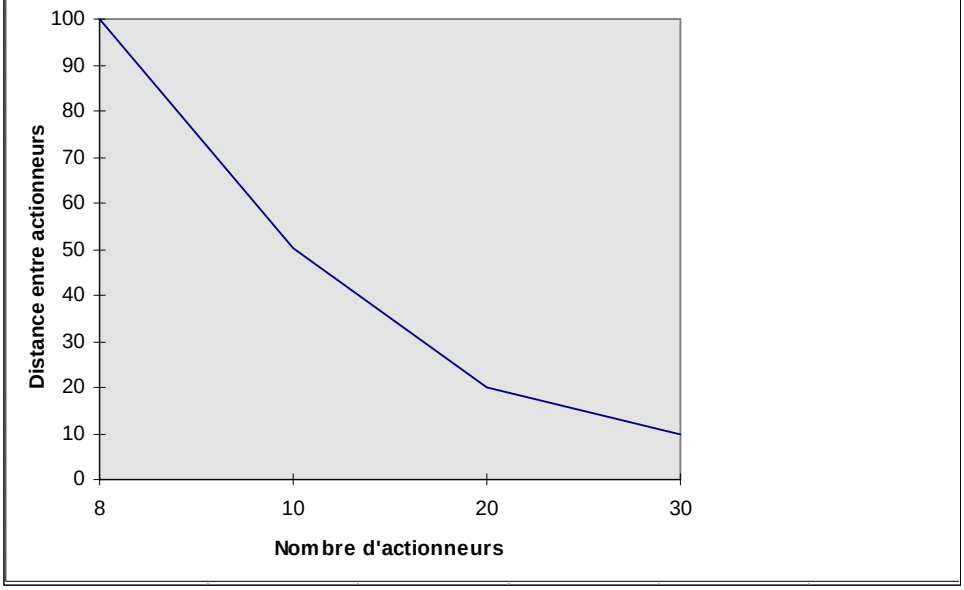

The limit of wiring is 30 remote actuators a maximum of 10 meters away.

Case of several standard pushbuttons

In this case, simply consider the pushbutton that is the farthest from the actuator and apply the results shown above.

Optimized Star Wiring

The restriction is due to the voltage drop between the control point and the electrically most remote actuator. Consequently, if you wish to control a large number of actuators with the same control, you can use star wiring following the rules listed below. This type of wiring allows you to connect as many branches as needed.

Example: I wish to control 100 motors from the same control point.

* If I use only one branch (wiring shown on page 10), the maximum distance between each actuator is 1 meter, which makes wiring impossible.

* If I use 5 branches of 20 motors, the distance between each actuator becomes equal to 20 meters, which is perfectly feasible.

Rules of star wiring:

* The distance between the control point and accessory EYYT050200 (Screw-type terminal plate) must be as short as possible (all the currents of the branches accumulate on this part of the cable and therefore the voltage drop is multiplied proportionately).

* To duplicate the number of branches, use one or more accessories EYYT050190, connected as close as possible to accessory EYYT050190.

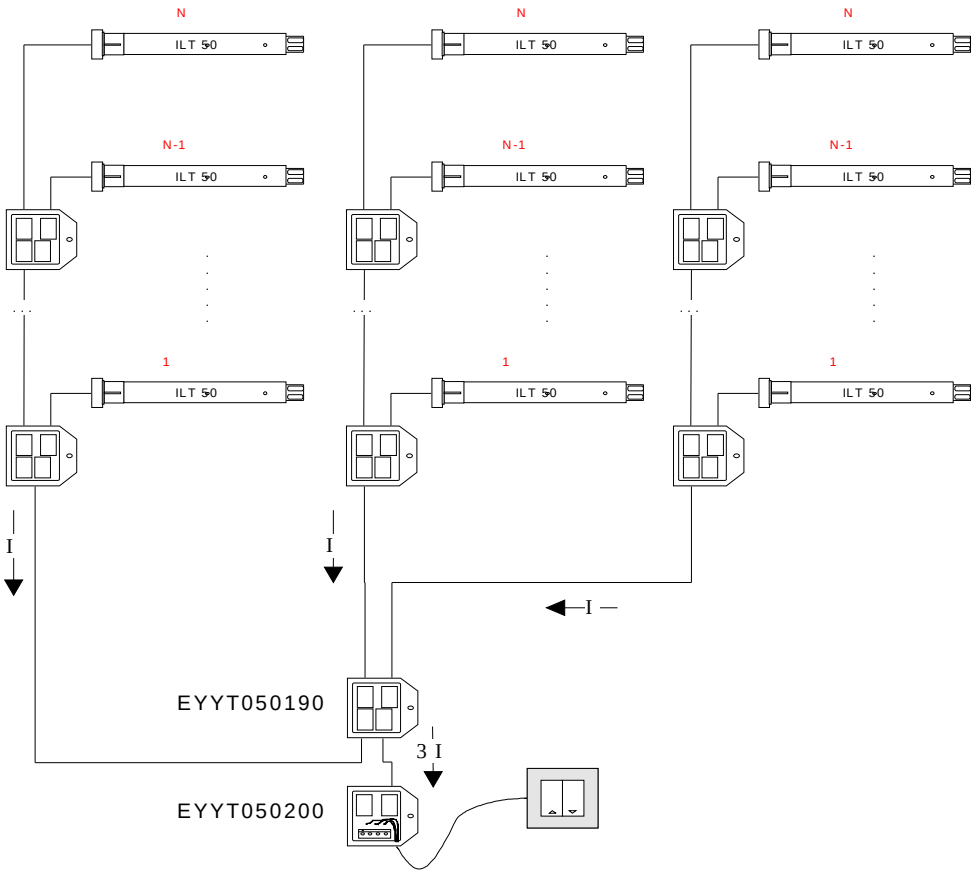

CONDITIONS FOR THE ACTUATORS / IR SENSOR ASSEMBLY

N Remote motors at a distance of Ln and cable of total length Lmax = N x Ln .
(Lmax represents the cumulative length of cable between the IR sensor and the most distant actuator).

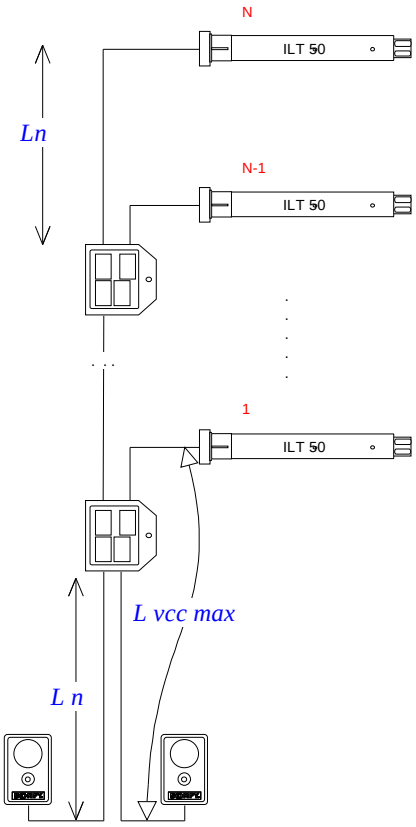

Two conditions must be met:

* The supply of power to the sensor by the actuator imposes a maximum distance Lvcc between the first actuator and the sensor.

* The distance Lmax separates the IR sensor and the most distant actuator.

Power Supply Restriction
The sensor operates with a minimum voltage of 4.5V and usually consumes 1 mA, which gives the following restriction:

Lvcc max = 10 meters

The ILT50 actuator nearest the IR sensor must not be connected at a distance greater than 10 meters from the sensor.

If several sensors are used, there are two possibilities:

Common cable:

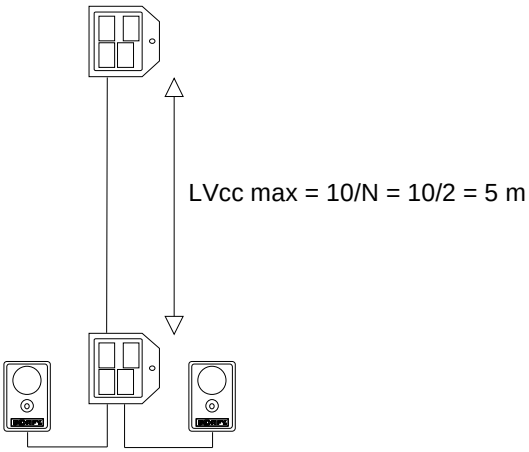

The maximum length Lvcc max is to be divided by the number of sensors (the current which circulates in the cable is proportionate to number of sensors, and therefore the voltage drop also).

Star wiring:

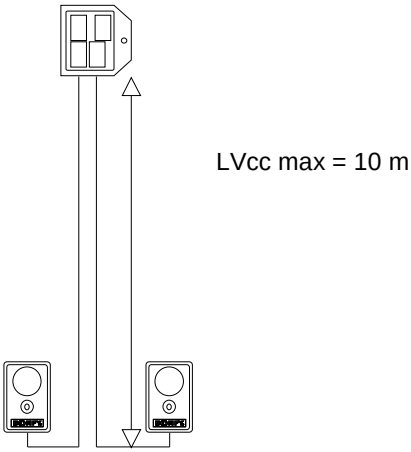

Restriction of length Lmax

You can use several IR sensors to control one or more ILT50s.

As a function of the number of actuators N, this table gives the maximum length of cable between 2 actuators, Ln max = Lmax / N .
(Lmax represents the cumulative length of cable between the IR sensor and the most distant actuator).

N	1	8	12	20	28
Ln max	1400	100	50	20	10

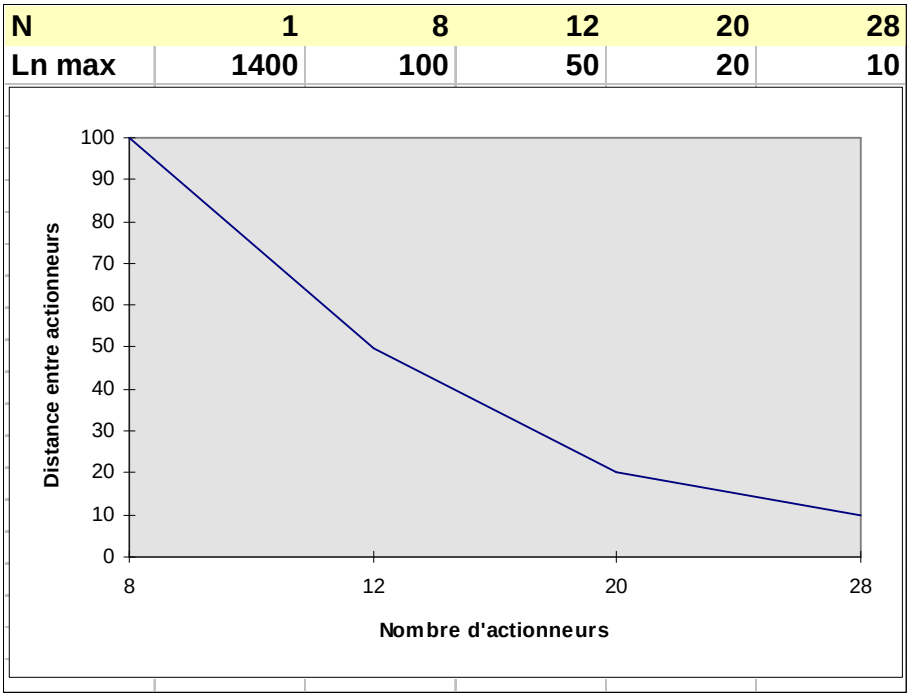

Example:
In order to control 20 actuators with an IR sensor, you must connect the actuator nearest to the sensor at a distance of less than 10 meters; the 19 others must be less than 20m apart (see wiring plan above).

Optimized star wiring

The restriction is due to the voltage drop between the sensor and the electrically most distant actuator. Consequently, if you wish to control a large number of actuators with the same sensor, you can use star wiring following the rules given below. This wiring can be used to form as many branches as needed .

Example: I wish to control 50 motors with the same sensor.

* If I use only one branch of 50 motors (wiring shown on page 11), the maximum distance between each actuator is 3 meters, which makes wiring impossible.

* If I use 5 branches of 10 motors, the distance between each actuator becomes equal to approximately 50 meters, which is perfectly feasible.

Rules of star wiring:

* The distance which separates the sensor and accessory EYYT050190 (Multiple telephone connector) must be as short as possible (all the currents of the branches accumulate on this part of the cable and therefore the voltage drop multiplies proportionately).

* In order to duplicate the number of branches, use one or more accessories EYYT050190, connected as closely as possible in order to minimize the length of cable in which the currents of the branches are added together.

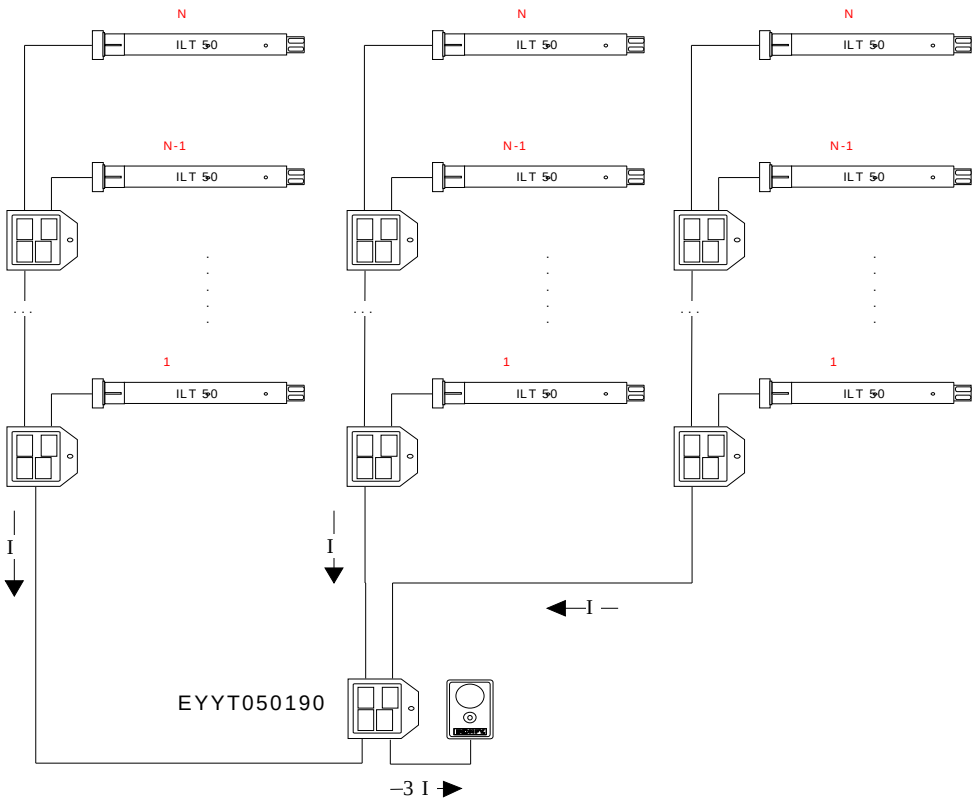

CONDITIONS FOR GENERAL CONTROLS

INSTALLATION WITH GENERAL CONTROL INTERFACE

The following installation parameters are used in the calculation of the restrictions:

- number of actuators for each assembly : N
- number of assemblies : G
- length of cable segment between actuators : Ln
- length of cable segment between assemblies : Lg

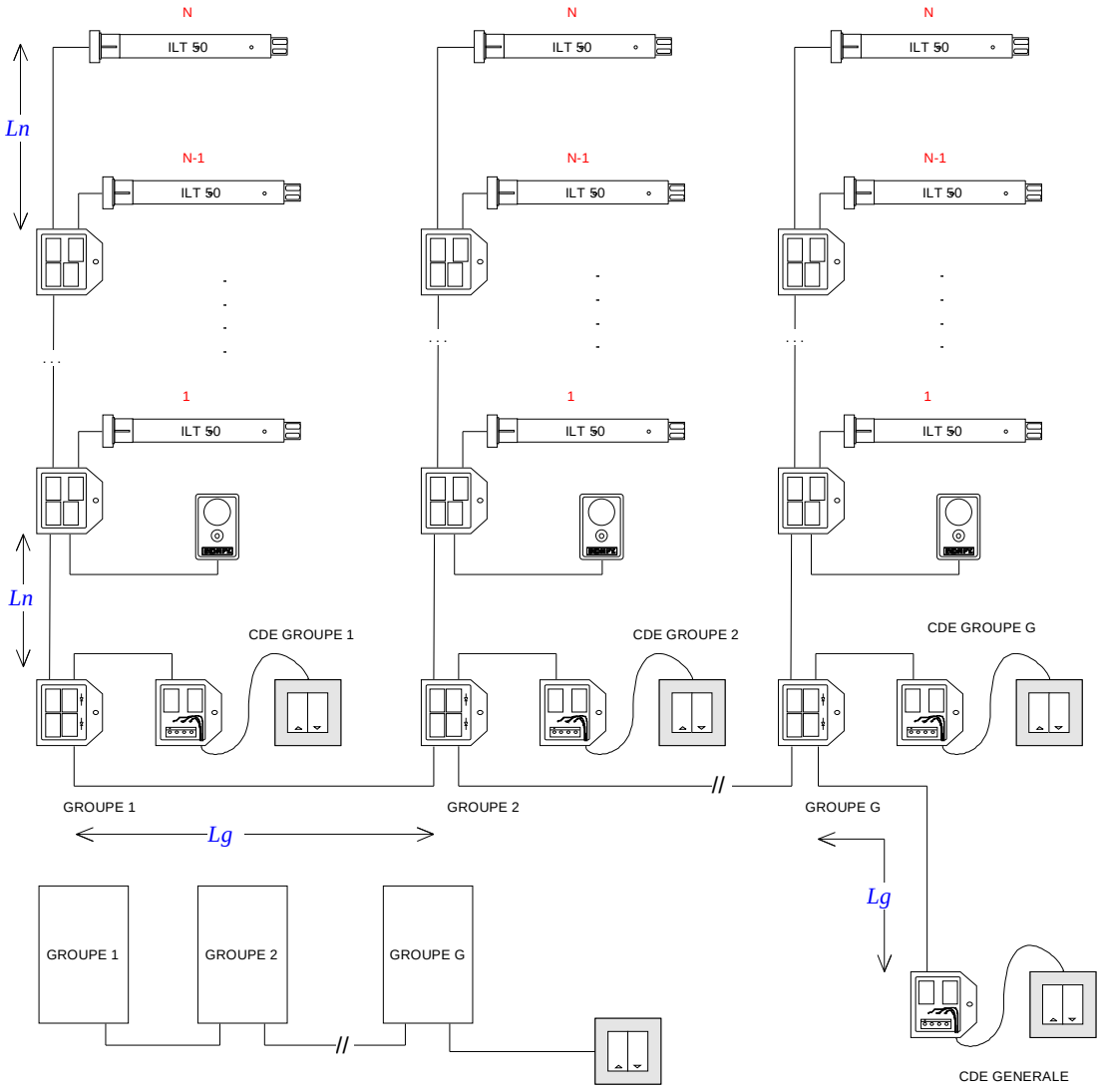

Table of values of Lg (distance between assemblies) for the various values of N and G with **Ln = 10 meters** (distance between actuators):

N / G	1	2	3	4	5
1	1800	600	300	180	120
2	900	300	150	90	50
5	300	100	50	25	15
10	100	40	20	10	5

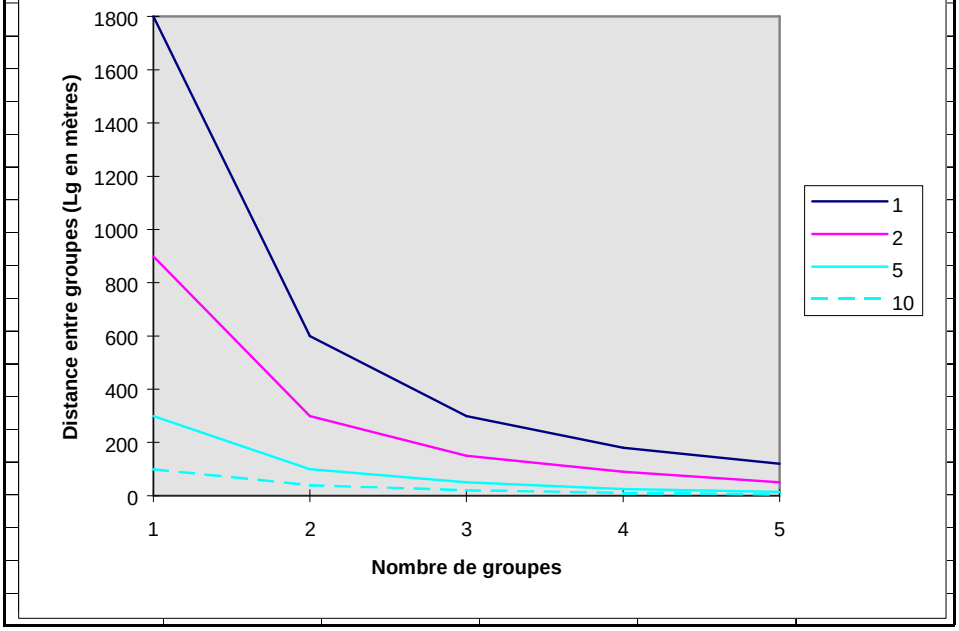

Table of values of Lg (distance between assemblies) for the various values of G and N with **Ln = 20 meters** (distance between actuators). A curve represents the number of actuators N

N / G	1	2	3	4	5
1	1800	600	300	180	120
2	900	300	150	80	50
5	300	100	50	30	20
10	80	25	10	8	5

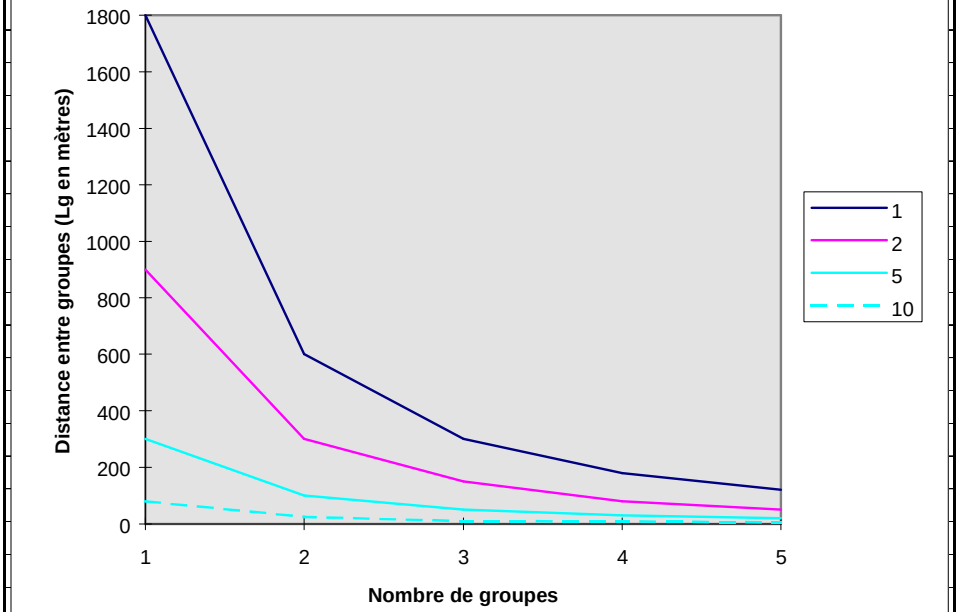

Table of values of G (number of assemblies) for the various values of N (number of actuators) and Lg (length of cable between assemblies) for **Ln (length of cable between actuators) = 10 meters:**

N / Lg (m)	10	20	50
1	19	13	9
2	13	9	6
5	8	5	3
10	5	3	2

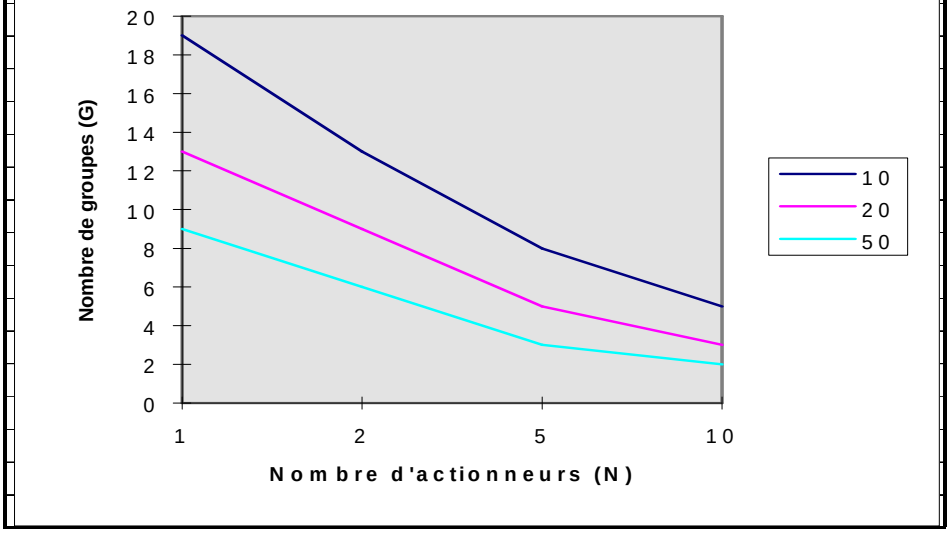

Table of values of G (number of assemblies) for the various values of N (number of actuators) and Lg (length of cable between assemblies) for **Ln (length of cable between actuators) = 20 meters:**

N / Lg (m)	10	20	50
1	19	13	8
2	13	9	6
5	8	5	3
10	4	2	1

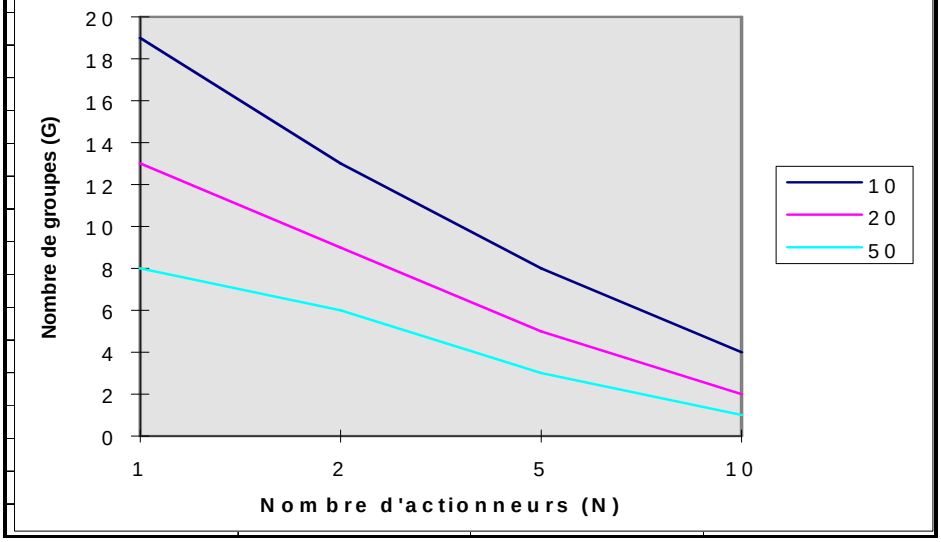

Optimized Star Wiring

If you wish to control a large number of actuator assemblies with a single general control, you can use star wiring following the rules given below. This wiring can be used to form as many branches as needed .

Example: I wish to control 100 motors in 10 assemblies of 10 with a single general control.

* Problem: the maximum possible is 5 assemblies (separated by a distance of 10 m) of 10 actuators (separated by a distance of 10m). This configuration is not feasible.

* Solution: Use 2 branches of 5 assemblies (separated by a distance of 10 m) of 10 actuators (separated by a distance of 10m).

Rules of star wiring:

* The distance which separates the general control and accessory EYYT050200 (screw-type terminal plate interface) must be as short as possible (all the currents of the branches accumulate on this part of the cable and therefore the voltage drop multiplies proportionately).

* In order to duplicate the number of branches, use one or more accessories EYYT050190, connected as closely as possible in order to minimize the length of cable in which the currents of the branches are added together.

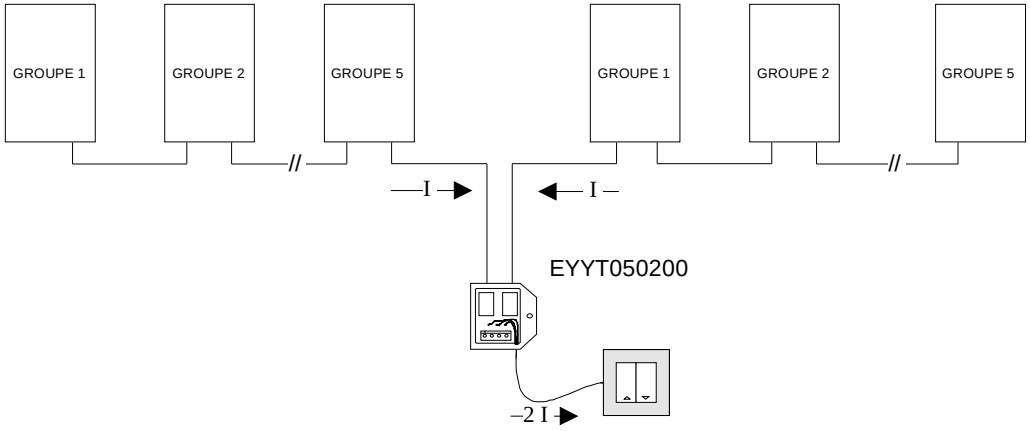

INSTALLATION WITH ILT8000

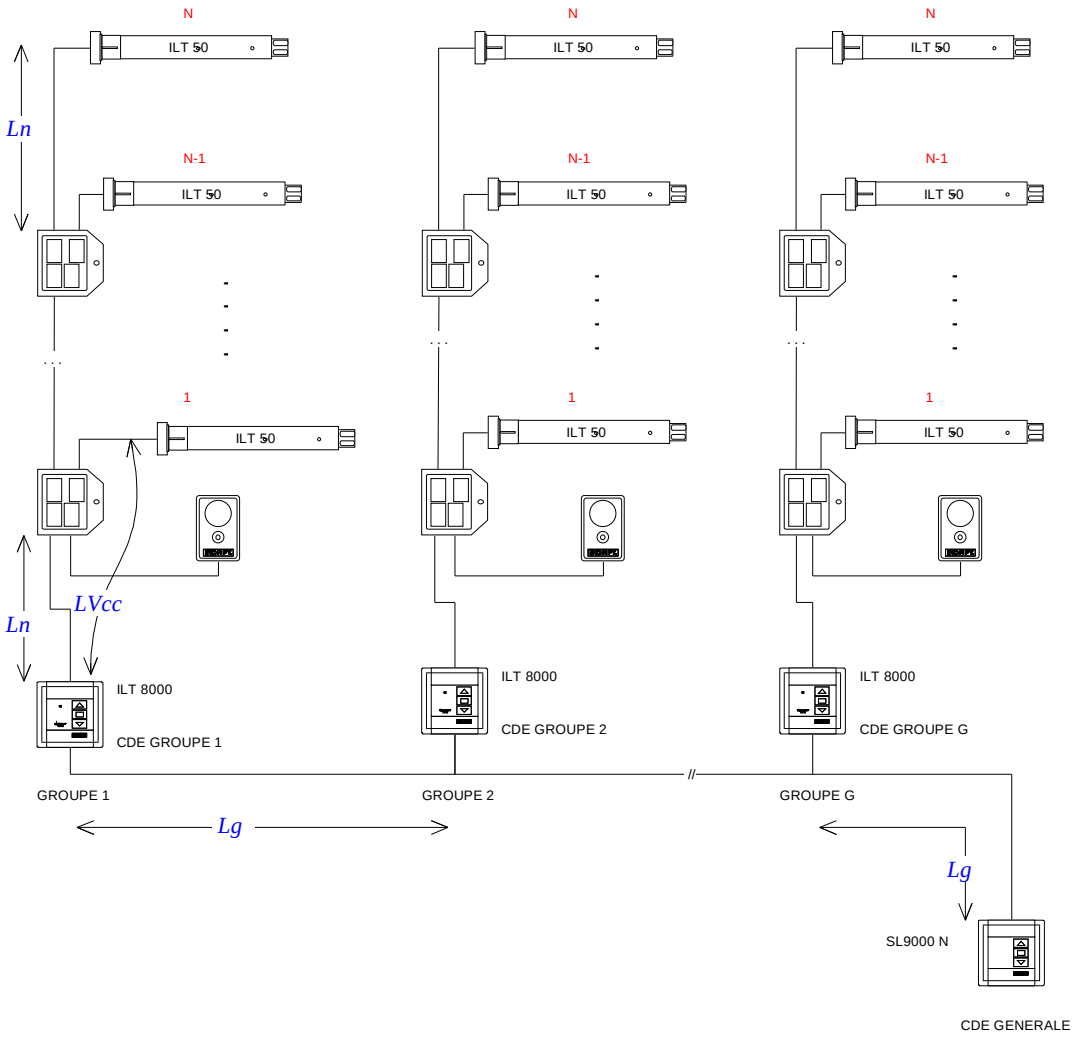

The individual control box ILT8000 can be connected to several actuators.
However, an actuator can only be connected to a single ILT8000.

As in the case of the IR sensor, two restrictions must be met:

* The supply of power to the ILT8000 by the actuator imposes a distance of Lvcc max between the ILT8000 and the nearest actuator.
* The distance Lmax separates the ILT8000 and the most distant actuator.

Power supply Restriction:
The restriction concerning the power supply between the actuator that powers the ILT8000 (EYYT050190 switch set to ON) and the ILT8000 itself arises from the voltage drop on the power supply line. This voltage drop is proportionate to the length of the telephone cable connecting the actuator to the ILT8000.

The ILT8000 functions with a voltage of 4.5V to 6V and usually consumes 20 mA. This gives a value of Lvcc max of ten meters.

Lvcc max = 10 meters

The ILT50 actuator nearest to the ILT8000 must not be wired with a distance of greater than 10 meters from the ILT8000.

<u>Lmax Restriction:</u>

An ILT8000 can control one or more ILT50s.
You must meet the above-mentioned restriction and comply with the distances given in the table below.

As a function of the number of actuators N, this table gives the maximum length of cable between 2 actuators Ln max = Lmax / N:
(Lmax represents the cumulative length of cable between the ILT8000 and the most distant actuator).

N	1	7	10	17	23
Ln max	3000	100	50	20	10

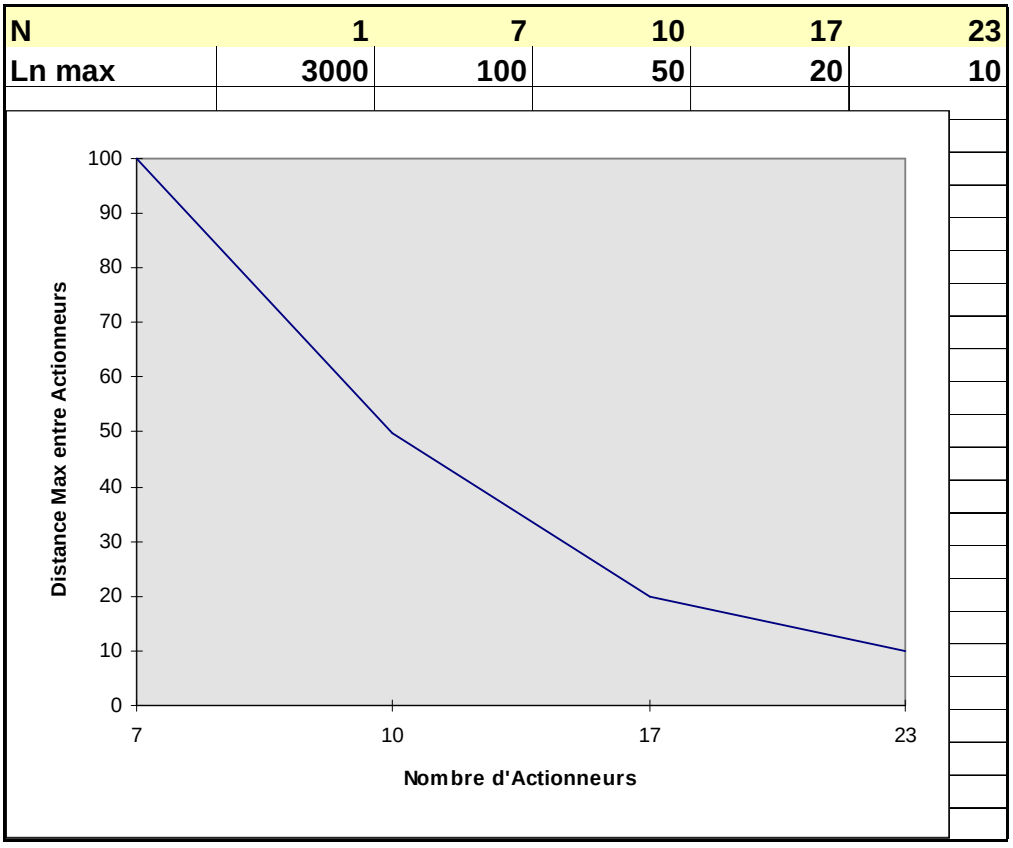

Example:
In order to control 20 actuators with an ILT8000 control box, you must connect the actuator nearest the ILT8000 at a distance of less than 10 meters and the 19 others less than 10m apart (see wiring diagram above).

General control

SL9000N

The table below gives the maximum number of ILT8000s connected to a general control for the given lengths of cable:

(*): cable of cross-section 0.75 mm2.

G	10	20	30	50	70
Lg	500	100	50	20	10

The general control SL9000n can drive up to 80 remote ILT8000s separated by 10 meters of 0.75 mm2 cable.

(*): cable of cross-section 1.5 mm2.

G	10	35	45	70	100
Lg	1000	100	50	20	10

The general control SL9000n can drive up to 100 remote ILT8000s separated by 10 meters of 1.5 mm2 cable.

SL1010N

The table below gives the maximum number of ILT8000s connected to a general control SL1010N for the given lengths of cable:

(*): cable of cross-section 0.75 mm2.

G	10	20	30	50	70
Lg	500	100	50	20	10

The general control SL1010N can drive up to 70 remote ILT8000s separated by 10 meters of 0.75 mm2 cable.

(*): cable of cross-section 1.5 mm2.

G	1	35	45	70	100
Lg	500	100	50	20	10

The general control SL1010N can drive up to 100 remote ILT8000s separated by 10 meters of 1.5 mm2 cable.

Control of subassembly 130059

The control of subassembly 130059 makes it possible to combine several general controls such as SL9000Ns, which are in turn connected to ILT8000s.
The limitation arises from the serial configuration of the diodes (BAT54) of the SL9000N on the STOP button and of the subassembly control (1N4004). Since the lower level from the point of view of the ILT8000 is the accumulation of the voltage drop in the 2 diodes and in the cable, functioning is guaranteed only if a standard pushbutton (without STOP) is used for the general control.

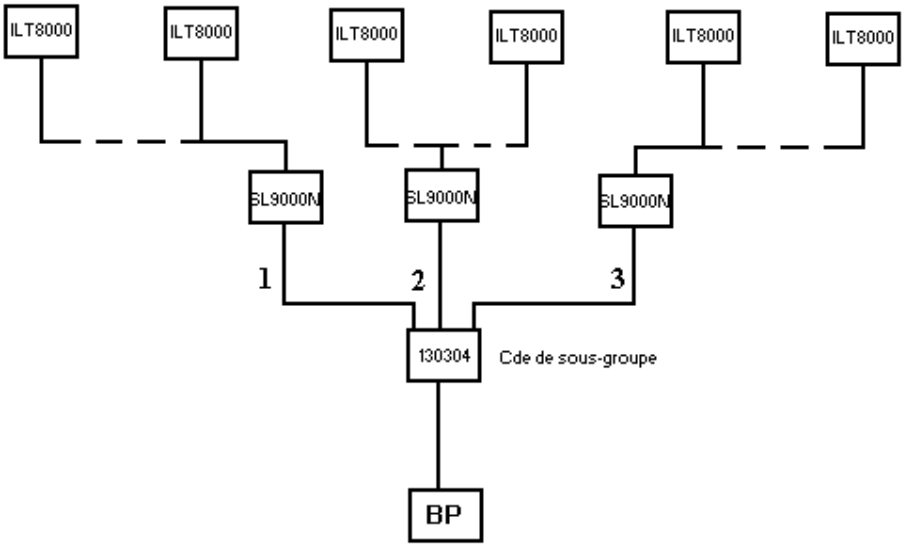

With this precaution in mind, the restrictions for installation are the following:

N	8	12	20	25
dL (m)	100	50	20	10

A general control with pushbutton can therefore drive up to 3 assemblies of 25 remote ILTs separated by a distance of 10 meters. This distance of 10 m is also the maximum distance between the pushbutton and the subassembly control, as well as between the subassembly control and the SL9000Ns.

Note:
You can therefore set up a hierarchy for a room (one ILT8000 for several windows of a room), a façade (several ILT8000s controlled by a SL9000N) or for three façades (1 pushbutton + 1 Subassembly control).
For the latter configuration, the number of ILT8000s is limited to 25 for each assembly. This is more restrictive than in the case of a single façade control (SL9000N + ILT8000) because it is possible in this case to drive up to 80 remote ILTs separated by a distance of 10m.

ADJUSTMENT OF END LIMITS

The adjustment of the end limits involves establishing the upper and lower limits of movement of the end product and determining the actuator's direction of rotation. There are two ways to adjust an end product:

1) The adjustment tool (ECST 050180)

This tool is connected directly to the actuator (use an equipped telephone cable). However, it is best to have a multiple telephone connector (EYYT 050190) in order to have outside access to the housing which contains the roller shutter.

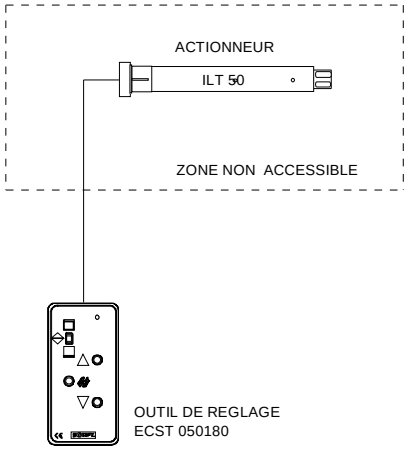

Montage déconseillé

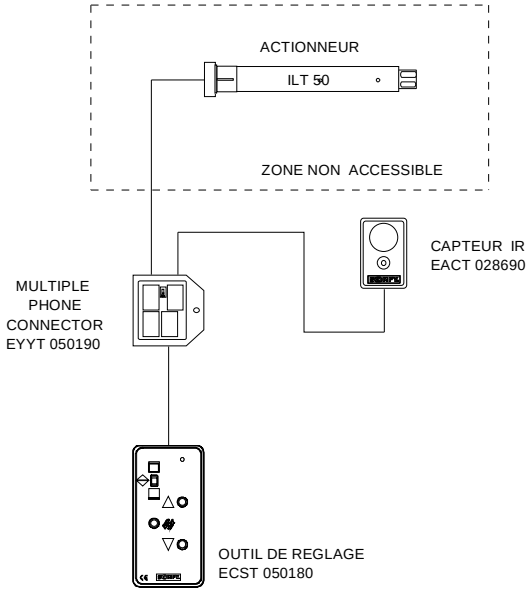

Montage conseillé

2) ILT8000

This control box can be configured (switch on the back panel) as an adjustment tool. In this case, the ILT must be wired to one actuator only.
Once the adjustment is completed, reconnect all the actuators to the ILT8000.

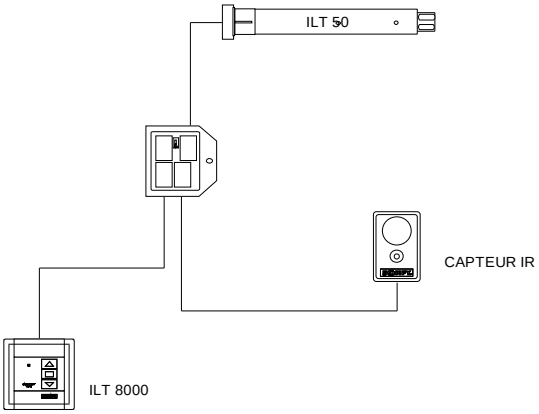

WIRING PRECAUTIONS

PASSING CABLES THROUGH THE SHEATHS

The actuators are powered by two cables:
- a power supply cable (230V: Ph, N , G)
- a control cable (5V): Up, Down, 5V, Earth

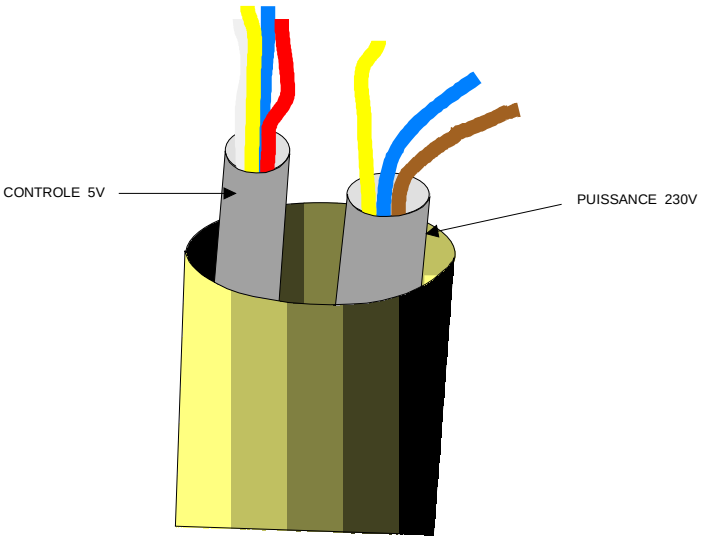

CURRENTLY BEING VALIDATED BY THE QUALITY DEPARTMENT (P.Rigoudy)
These two cables can be encased in the same sheath if the installer wishes to do so for economic reasons.