somfy	**Datasheet YSLO RTS**	**PAVLOVIC Jerome** **DOC113462** **02/03/2016**

Application	Swing shutter
Nominal voltage	230V - 50Hz
Power supply tolerances	207-253V AC
Number of wires of the cable	2
Wire section	0,75 mm²
Cable length	3 m
Cable type	RRF
Removable cable	No
Insulation class	Class 2
Type of limit switch unit	Electronic
Battery	12V - 2,3Ah - Lead acid
Number of DC motors	2 (two to four panels) / 1 (one panel)
DC motors speed	2 700 rpm
Output shaft speed at 12V	1,7 rpm
System of protection	IP 24
Temperature working range	-20°C / 60°C
Nominal provided torque	25 Nm
Maximal weight per panel	40 Kg
Minimum width per panel	395 mm
Maximal width per panel	1 000 mm
Maximum high per panel	3 000 mm
Maximum surface per panel	2 m²
Maximal wind speed	$V_{max} < \sqrt{\frac{7000}{H \times L}}$ Vmax : maximum wind speed (Km/h) with a maximum limit at 85km/h whatever the result of the previous equation H : panel height (m) L : max panel length (in case of linked panel : add the two panels lengths) (m)
Maximal consumed power	4 W
Radio frequency	433,42 MHz

Designation	Width of lintel (mm)		
	min	max	Comments
YSLO RTS 1P	550	1 000	
YSLO RTS 1P+1P	790	1 800	
YSLO RTS 2P LINKED	1 000	1 400	
YSLO RTS 1P + 2P LINKED	1 400	2 100	min between 1 280 and 1 400 according to feasability
YSLO RTS 2P + 2P LINKED	2 000	2 400	min between 1 770 and 2 000 according to feasability

Housing color						
Standard					**Specific**	
White	Brown	Ivory	Red	Grey	All RAL	Golden oak
9016	8014	1015	3004	7016		

Arms color			
Standard			**Specific**
White	Brown	black	All RAL
9016	8014	9005	
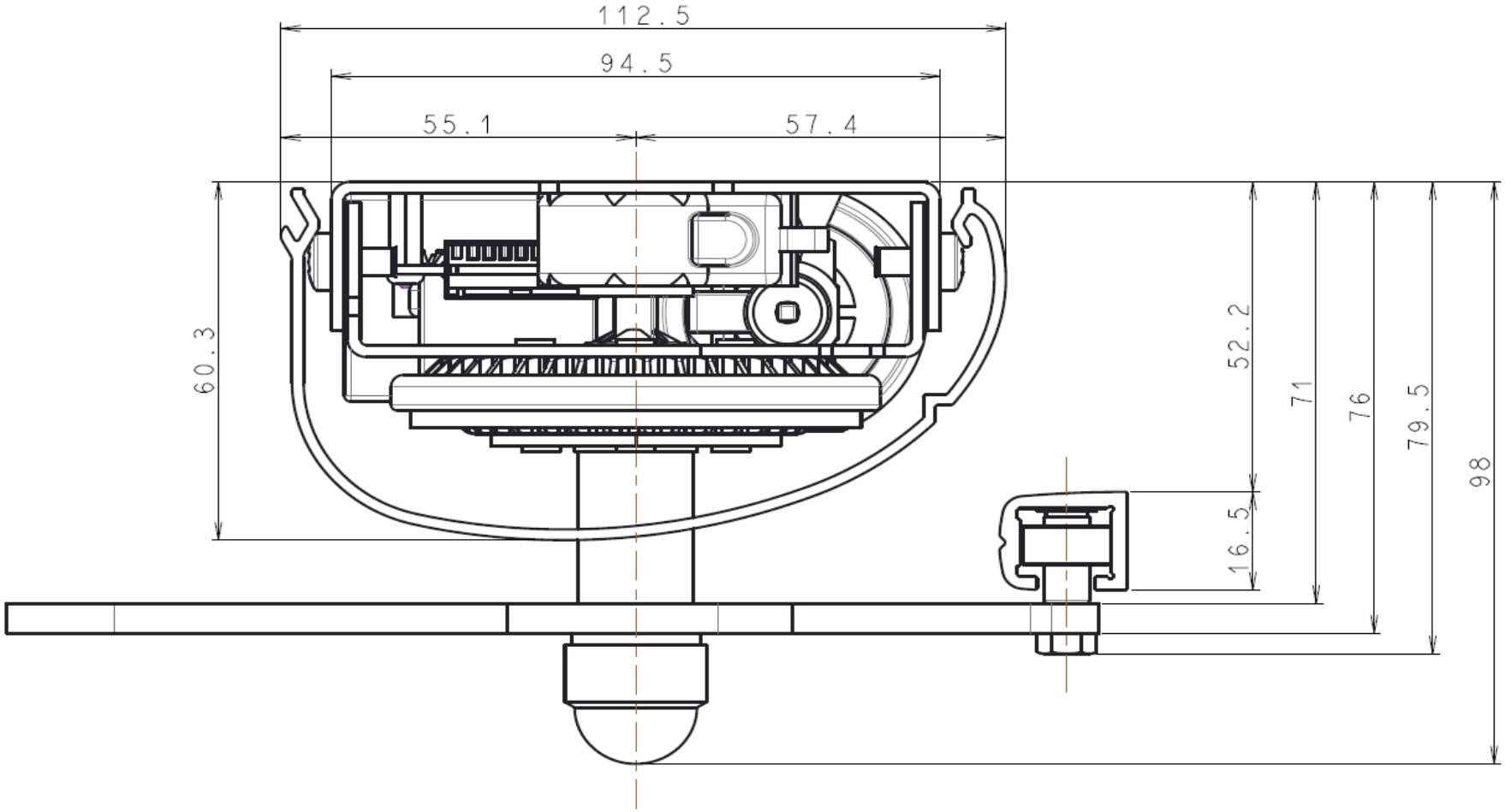
Some dimensions for information :